Solutions to practice problems 12/16/09

5.33. **IDENTIFY:** Apply $\sum \vec{F} = m\vec{a}$ to the composite object consisting of the two boxes and to the top box. The friction the ramp exerts on the lower box is kinetic friction. The upper box doesn't slip relative to the lower box, so the friction between the two boxes is static. Since the speed is constant the acceleration is zero.

SET UP: Let $+x$ be up the incline. The free-body diagrams for the composite object and for the upper box are given in Figures 5.33a and b. The slope angle ϕ of the ramp is given by $\tan\phi = \dfrac{2.50\text{ m}}{4.75\text{ m}}$, so $\phi = 27.76°$. Since the boxes move down the ramp, the kinetic friction force exerted on the lower box by the ramp is directed up the incline. To prevent slipping relative to the lower box the static friction force on the upper box is directed up the incline. $m_{tot} = 32.0\text{ kg} + 48.0\text{ kg} = 80.0\text{ kg}$.

EXECUTE: **(a)** $\sum F_y = ma_y$ applied to the composite object gives $n_{tot} = m_{tot}g\cos\phi$ and $f_k = \mu_k m_{tot} g\cos\phi$.

$\sum F_x = ma_x$ gives $f_k + T - m_{tot}g\sin\phi = 0$ and

$T = (\sin\phi - \mu_k\cos\phi)m_{tot}g = (\sin 27.76° - [0.444]\cos 27.76°)(80.0\text{ kg})(9.80\text{ m/s}^2) = 57.1\text{ N}$.

The person must apply a force of 57.1 N, directed up the ramp.

(b) $\sum F_x = ma_x$ applied to the upper box gives $f_s = mg\sin\phi = (32.0\text{ kg})(9.80\text{ m/s}^2)\sin 27.76° = 146\text{ N}$, directed up the ramp.

EVALUATE: For each object the net force is zero.

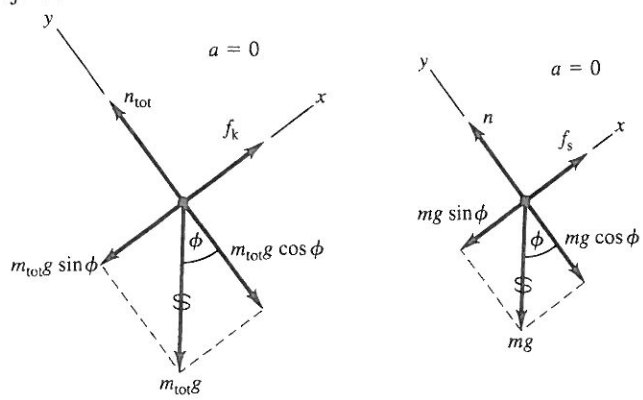

Figure 5.33a, b

5.34. **IDENTIFY:** Use $\sum \vec{F} = m\vec{a}$ to find the acceleration that can be given to the car by the kinetic friction force. Then use a constant acceleration equation.

SET UP: Take $+x$ in the direction the car is moving.

EXECUTE: **(a)** The free-body diagram for the car is shown in Figure 5.34. $\sum F_y = ma_y$ gives $n = mg$.

$\sum F_x = ma_x$ gives $-\mu_k n = ma_x$. $-\mu_k mg = ma_x$ and $a_x = -\mu_k g$. Then $v_x = 0$ and $v_x^2 = v_{0x}^2 + 2a_x(x - x_0)$ gives

$$(x - x_0) = -\frac{v_{0x}^2}{2a_x} = +\frac{v_{0x}^2}{2\mu_k g} = \frac{(29.1\text{ m/s})^2}{2(0.80)(9.80\text{ m/s}^2)} = 54.0\text{ m}.$$

(b) $v_{0x} = \sqrt{2\mu_k g(x - x_0)} = \sqrt{2(0.25)(9.80\text{ m/s}^2)(54.0\text{ m})} = 16.3\text{ m/s}$

EVALUATE: For constant stopping distance $\dfrac{v_{0x}^2}{\mu_k}$ is constant and v_{0x} is proportional to $\sqrt{\mu_k}$. The answer to part (b) can be calculated as $(29.1\text{ m/s})\sqrt{0.25/0.80} = 16.3\text{ m/s}$.

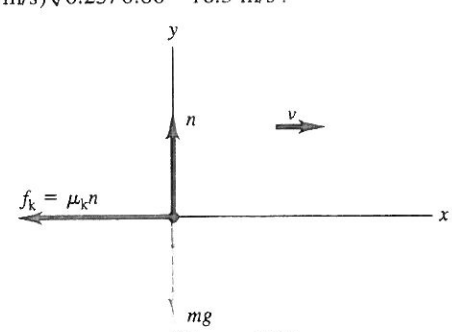

Figure 5.34

5.52. **IDENTIFY:** The acceleration of the person is $a_{rad} = v^2/R$, directed horizontally to the left in the figure in the problem. The time for one revolution is the period $T = \frac{2\pi R}{v}$. Apply $\sum \vec{F} = m\vec{a}$ to the person.

SET UP: The person moves in a circle of radius $R = 3.00\text{ m} + (5.00\text{ m})\sin 30.0° = 5.50\text{ m}$. The free-body diagram is given in Figure 5.52. $\vec{F}$ is the force applied to the seat by the rod.

EXECUTE: **(a)** $\sum F_y = ma_y$ gives $F\cos 30.0° = mg$ and $F = \frac{mg}{\cos 30.0°}$. $\sum F_x = ma_x$ gives $F\sin 30.0° = m\frac{v^2}{R}$.

Combining these two equations gives $v = \sqrt{Rg\tan\theta} = \sqrt{(5.50\text{ m})(9.80\text{ m/s}^2)\tan 30.0°} = 5.58\text{ m/s}$. Then the period is $T = \frac{2\pi R}{v} = \frac{2\pi(5.50\text{ m})}{5.58\text{ m/s}} = 6.19\text{ s}$.

(b) The net force is proportional to m so in $\sum \vec{F} = m\vec{a}$ the mass divides out and the angle for a given rate of rotation is independent of the mass of the passengers.

EVALUATE: The person moves in a horizontal circle so the acceleration is horizontal. The net inward force required for circular motion is produced by a component of the force exerted on the seat by the rod.

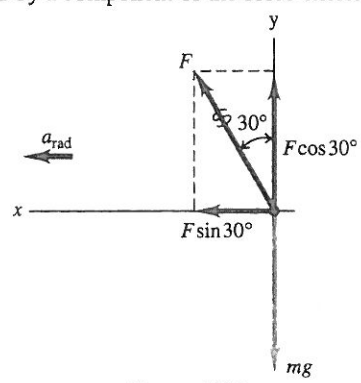

6.27. **IDENTIFY:** $W_{tot} = K_2 - K_1$. Only friction does work.

SET UP: $W_{tot} = W_{f_k} = -\mu_k mgs$. $K_2 = 0$ (car stops). $K_1 = \frac{1}{2}mv_0^2$.

EXECUTE: **(a)** $W_{tot} = K_2 - K_1$ gives $-\mu_k mgs = -\frac{1}{2}mv_0^2$. $s = \frac{v_0^2}{2\mu_k g}$.

(b) (i) $\mu_{kb} = 2\mu_{ka}$. $s\mu_k = \frac{v_0^2}{2g} = \text{constant}$ so $s_a\mu_{ka} = s_b\mu_{kb}$. $s_b = \left(\frac{\mu_{ka}}{\mu_{kb}}\right)s_a = s_a/2$. The minimum stopping distance would be halved. (ii) $v_{0b} = 2v_{0a}$. $\frac{s}{v_0^2} = \frac{1}{2\mu_k g} = \text{constant}$, so $\frac{s_a}{v_{0a}^2} = \frac{s_b}{v_{0b}^2}$. $s_b = s_a\left(\frac{v_{0b}}{v_{0a}}\right)^2 = 4s_a$. The stopping distance would become 4 times as great. (iii) $v_{0b} = 2v_{0a}$, $\mu_{kb} = 2\mu_{ka}$. $\frac{s\mu_k}{v_0^2} = \frac{1}{2g} = \text{constant}$, so $\frac{s_a\mu_{ka}}{v_{0a}^2} = \frac{s_b\mu_{kb}}{v_{0b}^2}$.

$s_b = s_a\left(\frac{\mu_{ka}}{\mu_{kb}}\right)\left(\frac{v_{0b}}{v_{0a}}\right)^2 = s_a\left(\frac{1}{2}\right)(2)^2 = 2s_a$. The stopping distance would double.

EVALUATE: The stopping distance is directly proportional to the square of the initial speed and indirectly proportional to the coefficient of kinetic friction.

7.50. **IDENTIFY:** Once the block leaves the top of the hill it moves in projectile motion. Use Eq.(7.14) to relate the speed v_B at the bottom of the hill to the speed v_{Top} at the top and the 70 m height of the hill.

SET UP: For the projectile motion, take $+y$ to be downward. $a_x = 0$, $a_y = g$. $v_{0x} = v_{Top}$, $v_{0y} = 0$. For the motion up the hill only gravity does work. Take $y = 0$ at the base of the hill.

EXECUTE: First get speed at the top of the hill for the block to clear the pit. $y = \frac{1}{2}gt^2$. $20\text{ m} = \frac{1}{2}(9.8\text{ m/s}^2)t^2$.

$t = 2.0\text{ s}$. Then $v_{Top}t = 40\text{ m}$ gives $v_{Top} = \frac{40\text{ m}}{2.0\text{ s}} = 20\text{ m/s}$.

Energy conservation applied to the motion up the hill: $K_{Bottom} = U_{Top} + K_{Top}$ gives

$\frac{1}{2}mv_B^2 = mgh + \frac{1}{2}mv_{Top}^2$. $v_B = \sqrt{v_{Top}^2 + 2gh} = \sqrt{(20\text{ m/s})^2 + 2(9.8\text{ m/s}^2)(70\text{ m})} = 42\text{ m/s}$.

EVALUATE: The result does not depend on the mass of the block.

7.75. **(a) IDENTIFY and SET UP:** Apply $K_A + U_A + W_{other} = K_B + U_B$ to the motion from A to B.

EXECUTE: $K_A = 0$, $K_B = \frac{1}{2}mv_B^2$

$U_A = 0$, $U_B = U_{el,B} = \frac{1}{2}kx_B^2$, where $x_B = 0.25\text{ m}$

$W_{other} = W_F = Fx_B$

Thus $Fx_B = \frac{1}{2}mv_B^2 + \frac{1}{2}kx_B^2$. (The work done by F goes partly to the potential energy of the stretched spring and partly to the kinetic energy of the block.)

$Fx_B = (20.0\text{ N})(0.25\text{ m}) = 5.0\text{ J}$ and $\frac{1}{2}kx_B^2 = \frac{1}{2}(40.0\text{ N/m})(0.25\text{ m})^2 = 1.25\text{ J}$

Thus $5.0\text{ J} = \frac{1}{2}mv_B^2 + 1.25\text{ J}$ and $v_B = \sqrt{\frac{2(3.75\text{ J})}{0.500\text{ kg}}} = 3.87\text{ m/s}$

(b) IDENTIFY: Apply Eq.(7.15) to the motion of the block. Let point C be where the block is closest to the wall. When the block is at point C the spring is compressed an amount $|x_C|$, so the block is $0.60\text{ m} - |x_C|$ from the wall, and the distance between B and C is $x_B + |x_C|$.

SET UP: The motion from A to B to C is described in Figure 7.75.

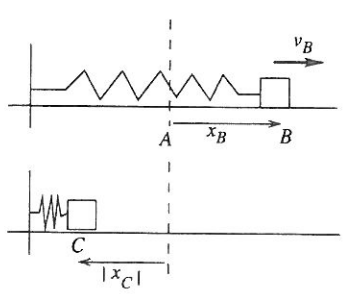

Figure 7.75

$K_B + U_B + W_{other} = K_C + U_C$

EXECUTE: $W_{other} = 0$

$K_B = \frac{1}{2}mv_B^2 = 5.0\text{ J} - 1.25\text{ J} = 3.75\text{ J}$ (from part (a))

$U_B = \frac{1}{2}kx_B^2 = 1.25\text{ J}$

$K_C = 0$ (instantaneously at rest at point closest to wall)

$U_C = \frac{1}{2}k|x_C|^2$

Thus $3.75\text{ J} + 1.25\text{ J} = \frac{1}{2}k|x_C|^2$

$|x_C| = \sqrt{\frac{2(5.0\text{ J})}{40.0\text{ N/m}}} = 0.50\text{ m}$

The distance of the block from the wall is $0.60\text{ m} - 0.50\text{ m} = 0.10\text{ m}$.

EVALUATE: The work $(20.0\text{ N})(0.25\text{ m}) = 5.0\text{ J}$ done by F puts 5.0 J of mechanical energy into the system. No mechanical energy is taken away by friction, so the total energy at points B and C is 5.0 J.

7.86. **IDENTIFY:** Use Eq.(7.16) to relate F_x and $U(x)$. The equilibrium is stable where $U(x)$ is a local minimum and the equilibrium is unstable where $U(x)$ is a local maximum.

SET UP: dU/dx is the slope of the graph of U versus x. $K = E - U$, so K is a maximum when U is a minimum. The maximum x is where $E = U$.

EXECUTE: **(a)** The slope of the U *vs.* x curve is negative at point A, so F_x is positive (Eq. (7.16)).

(b) The slope of the curve at point B is positive, so the force is negative.

(c) The kinetic energy is a maximum when the potential energy is a minimum, and that figures to be at around 0.75 m.

(d) The curve at point C looks pretty close to flat, so the force is zero.

(e) The object had zero kinetic energy at point A, and in order to reach a point with more potential energy than $U(A)$, the kinetic energy would need to be negative. Kinetic energy is never negative, so the object can never be at any point where the potential energy is larger than $U(A)$. On the graph, that looks to be at about 2.2 m.

(f) The point of minimum potential (found in part (c)) is a stable point, as is the relative minimum near 1.9 m.

(g) The only potential maximum, and hence the only point of unstable equilibrium, is at point C.

EVALUATE: If E is less than U at point C, the particle is trapped in one or the other of the potential "wells" and cannot move from one allowed region of x to the other.

8.40. **IDENTIFY:** Each component of horizontal momentum is conserved.

SET UP: Let $+x$ be east and $+y$ be north. $v_{S1y} = v_{A1x} = 0$. $v_{S2x} = (6.00\text{ m/s})\cos 37.0° = 4.79\text{ m/s}$, $v_{S2y} = (6.00\text{ m/s})\sin 37.0° = 3.61\text{ m/s}$, $v_{A2x} = (9.00\text{ m/s})\cos 23.0° = 8.28\text{ m/s}$ and $v_{A2y} = -(9.00\text{ m/s})\sin 23.0° = -3.52\text{ m/s}$.

EXECUTE: $P_{1x} = P_{2x}$ gives $m_S v_{S1x} = m_S v_{S2x} + m_A v_{A2x}$.

$$v_{S1x} = \frac{m_S v_{S2x} + m_A v_{A2x}}{m_S} = \frac{(80.0\text{ kg})(4.79\text{ m/s}) + (50.0\text{ kg})(8.28\text{ m/s})}{80.0\text{ kg}} = 9.97\text{ m/s}.$$

Sam's speed before the collision was 9.97 m/s.

$P_{1y} = P_{2y}$ gives $m_A v_{A1y} = m_S v_{S2y} + m_A v_{A2y}$.

$$v_{A1y} = \frac{m_S v_{S2y} + m_A v_{A2y}}{m_S} = \frac{(80.0\text{ kg})(3.61\text{ m/s}) + (50.0\text{ kg})(-3.52\text{ m/s})}{50.0\text{ kg}} = 2.26\text{ m/s}.$$

Abigail's speed before the collision was 2.26 m/s.

(b) $\Delta K = \frac{1}{2}(80.0\text{ kg})(6.00\text{ m/s})^2 + \frac{1}{2}(50.0\text{ kg})(9.00\text{ m/s})^2 - \frac{1}{2}(80.0\text{ kg})(9.97\text{ m/s})^2 - \frac{1}{2}(50.0\text{ kg})(2.26\text{ m/s})^2$. $\Delta K = -639\text{ J}$

EVALUATE: The total momentum is conserved because there is no net external horizontal force. The kinetic energy decreases because the forces between the objects do negative work during the collision.

10.83. **IDENTIFY:** Use conservation of energy to relate the speed of the block to the distance it has descended. Then use a constant acceleration equation to relate these quantities to the acceleration.

SET UP: For the cylinder, $I = \frac{1}{2}M(2R)^2$, and for the pulley, $I = \frac{1}{2}MR^2$.

EXECUTE: Doing this problem using kinematics involves four unknowns (six, counting the two angular accelerations), while using energy considerations simplifies the calculations greatly. If the block and the cylinder both have speed v, the pulley has angular velocity v/R and the cylinder has angular velocity $v/2R$, the total kinetic energy is

$$K = \frac{1}{2}\left[Mv^2 + \frac{M(2R)^2}{2}(v/2R)^2 + \frac{MR^2}{2}(v/R)^2 + Mv^2\right] = \frac{3}{2}Mv^2.$$

This kinetic energy must be the work done by gravity; if the hanging mass descends a distance y, $K = Mgy$, or $v^2 = (2/3)gy$. For constant acceleration, $v^2 = 2ay$, and comparison of the two expressions gives $a = g/3$.

EVALUATE: If the pulley were massless and the cylinder slid without rolling, $Mg = 2Ma$ and $a = g/2$. The rotation of the objects reduces the acceleration of the block.

12.81. **IDENTIFY:** Integrate $dm = \rho dV$ to find the mass of the planet. Outside the planet, the planet behaves like a point mass, so at the surface $g = GM/R^2$.

SET UP: A thin spherical shell with thickness dr has volume $dV = 4\pi r^2 dr$. The earth has radius $R_E = 6.38\times10^6$ m.

EXECUTE: Get $M : M = \int dm = \int \rho dV = \int \rho 4\pi r^2 dr$. The density is $\rho = \rho_0 - br$, where

$\rho_0 = 15.0\times10^3$ kg/m^3 at the center and at the surface, $\rho_S = 2.0\times10^3$ kg/m^3, so $b = \dfrac{\rho_0 - \rho_s}{R}$.

$$M = \int_0^R (\rho_0 - br)\ 4\pi r^2 dr = \frac{4\pi}{3}\rho_0 R^3 - \pi b R^4 = \frac{4}{3}\pi R^3 \rho_0 - \pi R^4\left(\frac{\rho_0 - \rho_s}{R}\right) = \pi R^3\left(\frac{1}{3}\rho_0 + \rho_s\right) \text{ and } M = 5.71\times10^{24} \text{ kg.}$$

Then $g = \dfrac{GM}{R^2} = \dfrac{G\pi R^3\left(\frac{1}{3}\rho_0 + \rho_s\right)}{R^2} = \pi R G\left(\dfrac{1}{3}\rho_0 + \rho_s\right)$.

$$g = \pi\left(6.38\times10^6 \text{m}\right)\left(6.67\times10^{-11}\ \text{N}\cdot\text{m}^2/\text{kg}^2\right)\left(\frac{15.0\times10^3\ \text{kg/m}^3}{3} + 2.0\times10^3\ \text{kg/m}^3\right).$$

$g = 9.36$ m/s^2.

EVALUATE: The average density of the planet is $\rho_{av} = \dfrac{M}{V} = \dfrac{M}{\frac{4}{3}\pi R^3} = \dfrac{3(5.71\times10^{24}\ \text{kg})}{4\pi(6.38\times10^6\ \text{m})^3} = 5.25\times10^3$ kg/m^3. Note that this is not $(\rho_0 + \rho_s)/2$.

15.54. **IDENTIFY:** The maximum vertical acceleration must be at least g.

SET UP: $a_{max} = \omega^2 A$

EXECUTE: $g = \omega^2 A_{min}$ and thus $A_{min} = g/\omega^2$. Using $\omega = 2\pi f = 2\pi v/\lambda$ and $v = \sqrt{F/\mu}$, this becomes $A_{min} = \dfrac{g\lambda^2\mu}{4\pi^2 F}$.

EVALUATE: When the amplitude of the motion increases, the maximum acceleration of a point on the rope increases.